LITERATURE

OVER-VOLTAGE PROTECTOR 2 (OVP2)

DAIRYLAND
ELECTRICAL INDUSTRIES
ALWAYS RUGGED. ALWAYS RELIABLE.

INTRODUCTION

The Over-Voltage Protector (OVP) design has been established since 1999 as the premier explosion-proof (Division 1) protection device for use on cathodically protected structures, using solid-state technology. Dairyland offers a variation of the OVP design in a molded housing, designated as the OVP2, for Division 2, Zone 2, or ordinary locations. The OVP2 package offers the same conservative design and features of the OVP, but in a lighter weight and lower cost package.

The OVP2 functions as an AC and DC isolation device, preventing the flow of any current, up to a predetermined voltage threshold. For voltage that attempts to exceed the threshold, the device instantly switches to the shorted mode, providing over-voltage protection. After the event is over, the device automatically switches back to the blocking mode. This operation can occur an unlimited number of times, and is typically due to AC faults and lightning, which the OVP2 is rated for. While the standard threshold is -2V/+2V, the OVP2 can be supplied with up to a -3V/+1V threshold and several lower threshold combinations. Contact Dairyland for other threshold options. The threshold is the absolute, or peak, voltage at which switching occurs, and is the sum of the DC and peak AC voltage across the terminals of the device. This results in a very low, and safe clamping voltage across the OVP2 terminals.

As the OVP2 switches based on the DC plus peak AC voltage, care should be taken to apply the device where induced AC voltage is not present or anticipated. In the presence of induced AC voltage, the OVP2 will switch to the shorted mode and could affect the cathodic protection system. Where induced AC voltage is present, apply the Dairyland model PCR or SSD (Div. 2 locations), or PCRH (Div. 1), depending on the applications and ratings needed.

COMMON APPLICATIONS

Isolation Joint Protection

Isolation joints often need over-voltage protection against lightning and AC fault current. Due to the small clearance between opposite sides of the isolation flange, a protective device must provide a low clamping voltage, including the voltage effects of the conductors or bus bars used to connect the product (See the Dairyland technical articles on conductor length relating to lightning effects.)

The OVP2 will:

- Provide over-voltage protection (e.g., isolation joints).
- Provide AC and DC isolation for voltages below the voltage blocking level selected and an effective grounding (or coupling) path whenever the voltage attempts to exceed the voltage blocking level (e.g., to eliminate objectionable DC current paths).

Airport Fueling Stations

Airports utilize underground piping to transport large amounts of jet fuel, and this critical infrastructure requires cathodic protection to prevent corrosion. Since cathodic protection systems utilize isolation joints to sectionalize the piping, arcing at isolation joints presents a hazard to system operation and personnel, whether due to AC fault current, lightning, or static buildup. Over-voltage protection of the isolation joints can be accomplished using the OVP2.

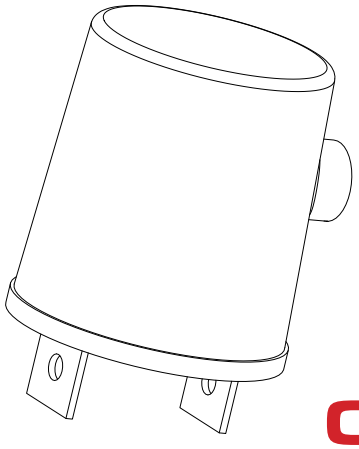

OVP2

Over-Voltage Protector 2

DID YOU KNOW?

The OVP2 has been certified by independent laboratories Underwriters Laboratories and DEMKO for compliance to worldwide standards and codes, and is certified for use in Div 2 and Zone 2 hazardous locations. For more information on certifications and listings, visit www.dairyland.com.

PRODUCT OVERVIEW

Background

Most cathodically protected pipelines have isolation joints which are installed for various reasons, such as: (1) where pipeline ownership changes, and (2) to segment cathodically protected pipelines from facilities, within which the piping or equipment is normally grounded (e.g., metering stations, power plants, storage tanks, etc.).

Isolation joints fall into two major categories: field-fabricated isolation joints which are field assembled using insulating materials furnished in a prepackaged kit, and factory-fabricated monolithic isolation joints which are furnished in a short section of pipe to enable welding the joint into the pipeline.

Of these two types, the most common is the field-fabricated version. Most isolation joint kits do not come with a published voltage withstand capability for the finished joint, primarily due to the many variables involved in a field assembly, and the fact that they were initially intended to only block DC cathodic protection voltage. Without voltage withstand data for the joint, a user cannot be completely sure that any device selected to provide over-voltage protection would in fact provide the desired protection.

Manufacturers of factory-fabricated isolation joints do publish voltage withstand data and such joints can be ordered to withstand a specified voltage withstand level.

To provide the highest level of over-voltage protection for any application, it is necessary to: (1) utilize a device that clamps the voltage to the lowest allowable level and, (2) install the device with the shortest possible lead length to minimize the voltage created by lead inductance. The OVP2 was designed to these criteria, thereby providing the highest level of over-voltage protection possible.

Since isolation joints in many pipelines are by definition a “hazardous location” (depending on the material being transported), the OVP2 is packaged and listed for use in Class 1, Div. 2 and Zone 2 hazardous locations.

Blocking Voltage

At a voltage below the blocking voltage selected, the OVP2 is an isolating device and prevents the flow of both AC and DC current. At a voltage above the blocking voltage selected, the OVP2 is a bidirectional conducting device which readily allows current to flow, thereby limiting the voltage.

The blocking voltage choices are designated as “A/B” in the model number structure where “A” is the (-) blocking voltage and “B” is the (+) blocking voltage as measured from the negative terminal with respect to the positive terminal.

Blocking Voltage Ratings

Recommended for most applications: -2/+2 (standard)

Other blocking voltage options include -3/+1 and other lower blocking voltage combinations. Contact Dairyland for options.

The blocking voltage of -2/+2 is usually adequate for most applications, since the voltage difference between the two connected points is usually much less than 2V. For example, an isolation joint on a cathodically protected pipeline either has cathodic protection on both sides of the joint, leaving the voltage difference near zero, or one side has CP and the other is unprotected, with a typical difference of about 1V. For cases where a higher blocking voltage is needed, the model with a -3/+1 threshold is usually adequate. In the model number structure the polarity signs are not shown, but the polarity described above is implied. Polarity marks (+ and -) are provided on the OVP2.

DC Leakage Current versus Blocking Voltage

The DC leakage current at the maximum blocking voltage for any OVP2 model is normally less than 10 milliamperes at 20°C and less than 100 milliamperes at 65°C. With normal cathodic protection voltage across the OVP2, the leakage current is typically well under 1 milliampere under either temperature condition, a value that is insignificant to a cathodic protection system.

AC Fault Current Rating

There are applications where an over-voltage protective device may be subject to fault current, even though no induced AC voltage is present. For this reason the OVP2 was designed to have AC fault current carrying capability. The OVP2 will limit the voltage between its connection points to less than 10 volts AC under the maximum fault current ratings listed in the following table. The values are amperes rms symmetrical.

AC Fault Current Ratings
(Amps AC-RMS Symmetrical 50/60Hz)

Cycles	1.2kA	2kA	3.7kA	5kA
1	2100	5300	6500	8800
3	1600	4500	5000	6800
10	1400	3700	4200	5700
30	1200	2000	3700	5000

Lightning Impulse Current Rating

The lightning impulse current rating should not be confused with the AC fault current rating. Lightning has a very different waveform, with a faster rise time, a shorter duration, and much less energy than an AC current waveform of the same peak current. Lightning current ratings are established by subjecting the over-voltage protective device to representative lightning current in a high power test laboratory. The waveforms most commonly used are the 8 x 20 microsecond waveform and the 4 x 10 microsecond waveform. The first number represents the time it takes the lightning impulse to reach its crest value and the second number represents the time it takes for the current to decrease to 1/2 its crest value.

Lightning Impulse Current Rating		
Model	**Rating**	**Waveform**
1.2kA	100kA Crest	8 x 20
2kA	100kA Crest	8 x 20
3.7kA	100kA Crest	8 x 20
5kA	100kA Crest	8 x 20

FEATURES AND CERTIFICATIONS

⚠ WARNING

Keep the Conductors Short!

The OVP2 is designed to keep the voltage between the device terminals to a limited value. During lightning conditions, a more important factor than the OVP2 voltage clamping capability is the voltage developed in the conductors or bus used to attach the device. Use low inductance bus bars or conductors ideally less than 6 inches (150 mm) long for best results. More information on conductor length is available at www.dairyland.com.

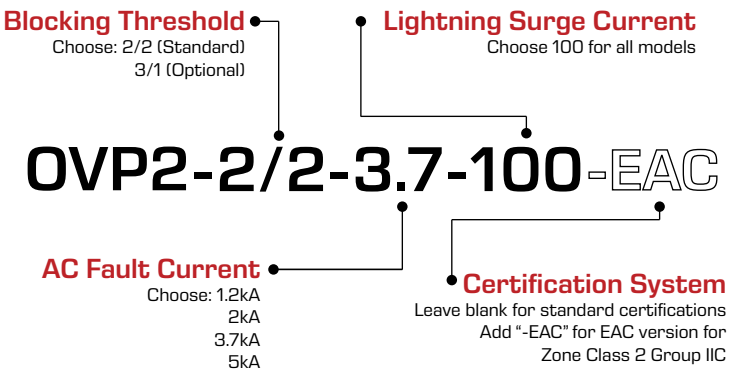

Ordering Instructions

Certifications

The OVP2 is Underwriters Laboratories (UL) listed as an over-voltage protective device for use in hazardous locations in accordance with NFPA 70, (U.S. National Electrical Code) Articles 500-505 for Class I, Div. 2, Groups A, B, C, D, per ANSI/ISA 12.12.01-2011. The OVP2 is also C-UL listed to the above classifications per Canadian Code C22.2 No. 213-M1987 (R2008). The listing is valid for ambient temperatures of -45ºC to +65°C. Protection from over-voltage due to lightning complies with the pertinent requirements of ANSI C62.11.

The OVP2 is also UL listed as meeting the requirements of an effective grounding path as defined in NFPA 70 Article 250-2, 250.4 (A) (5), and as suitable for the isolation of objectionable DC current from cathodically protected systems to ground as defined in Article 250.6(E). Similarly, it is C-UL listed for meeting the effective grounding path requirements of Canadian Electrical Code requirements of the Canadian Electrical Code C22.1-12, Section 10-500, and isolation of objectionable DC current per Section 10-806.

The OVP2 has been certified to ATEX Directive 2014/34/EU and IECEx requirements for use in Zone 2, Group IIC hazardous locations by UL/DEMKO to: EN IEC 60079-0: 2018, EN 60079-15: 2010, IEC 60079-0: 7th Ed, IEC 60079-15: 4th Ed.

The EAC version of the OVP2, available by ordering an OVP2 model with an "-EAC" suffix, is certified to the EAC requirements of the Customs Union (Russia, Kazakhstan, etc) for use in Zone Class 2, Group IIC hazardous locations by NANIO-CCVE to: GOST R IEC 60079-15-2010, GOST R IEC 60079-0-2011.

Solid-State Design

The OVP2 uses proven solid-state components which have an instantaneous response with respect to voltage, thereby initiating voltage clamping immediately when the voltage attempts to exceed the blocking level selected.

Fail-Safe

An important safety feature of the OVP2 is that if subject to AC fault current or lightning impulse current such that failure occurs, failure will occur in the shorted mode. In the shorted mode, the OVP2 will carry rated fault current or lightning impulse current and still provide an effective grounding (or conducting) path.

Field Testing/Maintenance

The OVP2 can be field tested with an AC/DC multimeter and clamp-on AC ammeter. Testing procedures are included in the installation instructions. The OVP2 is completely maintenance-free.

Enclosure

The OVP2 is packaged in a molded, non-metallic enclosure which is rated IP68 (to 2m depth) and is suitable for indoor or outdoor use, in submersible and non-submersible applications. See the OVP2 outline drawings for dimensional data.

The OVP2 must not be installed such that it may be submerged in freezing conditions.

Polarity/Electrical Connection

The terminals of the OVP2 are marked for polarity. The negative terminal should connect to the more negative structure, or the structure with the cathodic protection applied, while the positive terminal should connect to the grounded or more positive structure.

Number of Operations

The number of times that the OVP2 can be subject to its rated lightning or AC fault current rating is virtually unlimited, provided the operations are not immediately repetitive.

Energy Requirements

None. The device is totally passive.

Ambient Operating Temperature

-45° C to +65° C

MOUNTING OPTIONS

Mounting

Several different mounting options are offered depending on the application.

Mounting Accessories

Numerous mounting accessories are available from Dairyland to aid in the proper installation of the OVP2. Detailed accessory information, including complete installation instructions are available on the Dairyland website here: Dairyland Accessories.

Specific Installation Guidance

The Dairyland website contains detailed information on the installation methods specific to a given application. For wiring diagrams and/or application guidance, see Dairyland Applications.

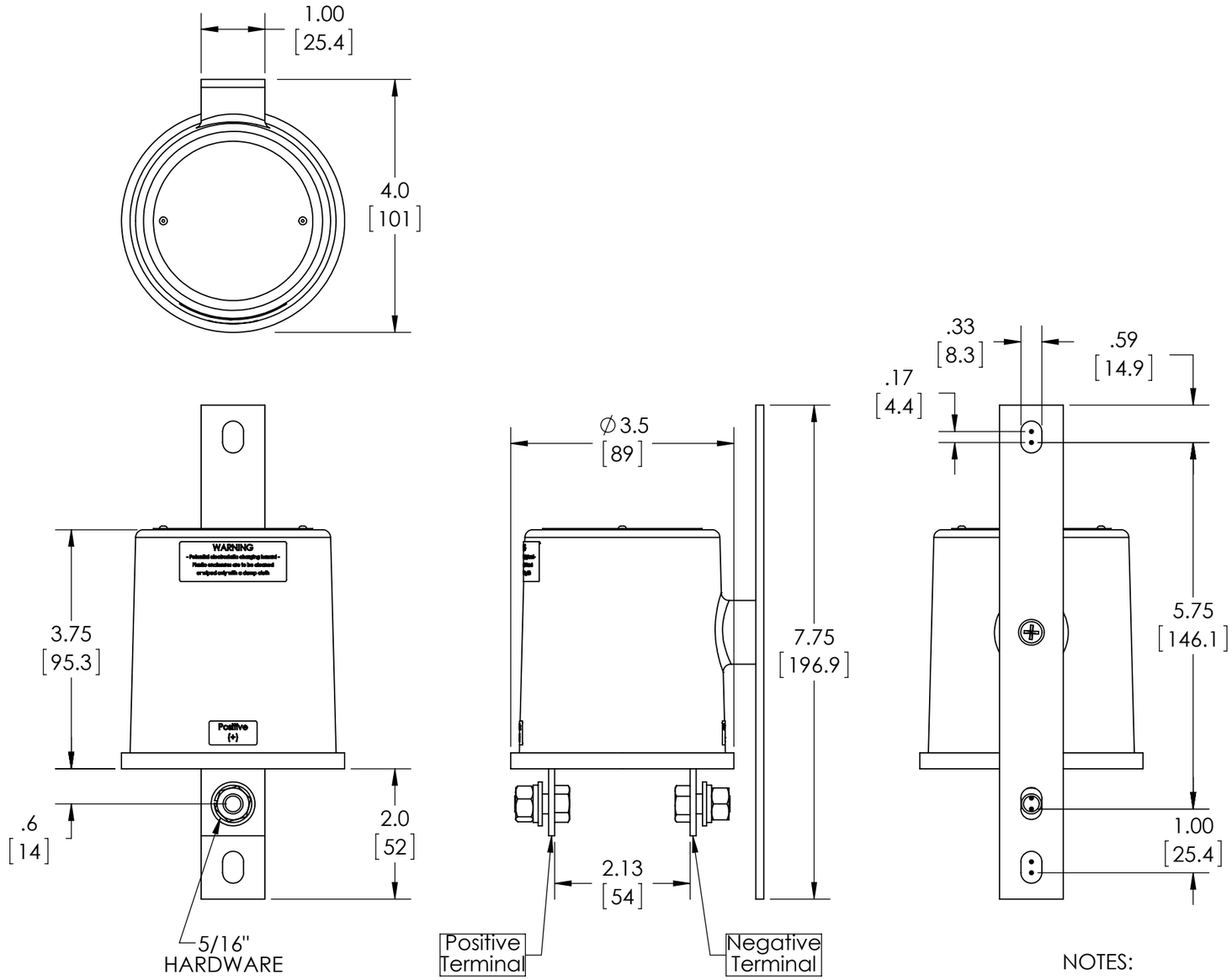

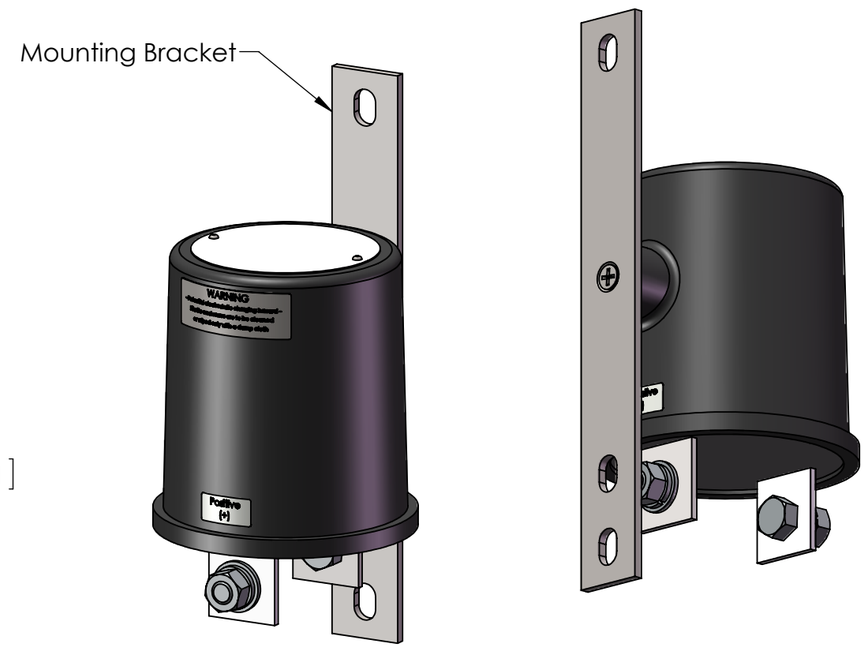

NOTES:

1. Applies to all OVP2 models
2. Optional stainless steel mounting bracket, part number MTG-OVP2, must be ordered separately, if needed

ANSI Y14.5M 1994 APPLIES

UNLESS NOTED
UNITS: INCHES
3-PLACE: ±.005
2-PLACE: ±.015
1-PLACE / FRAC: ±.03
ANGULAR: ±1
63

DAIRYLAND ELECTRICAL INDUSTRIES, INC.
P.O. BOX 187
STOUGHTON, WI 53589
608-877-9900
DAIRYLAND.COM

DESCRIPTION
OVP2 All Models Outline Drawing

DOCUMENT #	REV	DATE DRAWN	DWG SIZE	DATE APPROVAL
100077	A	2015-04-08	B	2015-04-13

SCALE 1:2	DRAWN: JPW	SHEET: 1 OF 1	DWG APPROVAL: HNT