INSTRUCTIONS

CAD-270

DAIRYLAND
ELECTRICAL INDUSTRIES

READ ENTIRE DOCUMENT BEFORE USING THE CAD-270.

The Capacitive Assessment Device (CAD-270) is used for the primary purpose of determining which type of decoupler is best suited for a given application, a PCRX decoupler or a standard decoupler such as an SSD or PCR. By comparing waveforms without any decouplers installed to waveforms with the CAD-270 installed (or multiple CAD-270s), the extent and nature of the influence from traditional decouplers on instant off potential measurements can be established.

Instant off surveys are influenced by a number of factors. For simplification, we can group these influences into two categories; site conditions and decouplers. Site conditions are those factors related to the pipeline itself; the pipeline's coating, the soil conditions, and a number of other environmental elements. Decouplers are necessary for blocking DC current, AC mitigation, safety grounding and overvoltage protection. However, standard decouplers influence instant off surveys via a capacitive discharge and associated dissipation time that ultimately can lead to potential measurements that are more electronegative than they truly are. The number and proximity of decouplers also can influence an instant off survey.

While the capacitive effect of a standard decoupler will always be present, it is the site conditions that largely determine whether or not that capacitive dissipation time will result in either error prone data or off cycles that need to be excessively long to reach the true polarized potential. The CAD-270 was created to be a low-cost device capable of mimicking the capacitive discharge effect of a standard decoupler as a means to test instant off response for given site conditions.

For more in-depth information, see Dairyland article: Testing and Evaluation of Decoupler Capacitive Effects and Utilization of the Dairyland Model PCRX.

WORKER SAFETY

For worker safety during connection or disconnection of this device, it is recommended that the user obtain certain equipment; namely a pair of electrically insulated gloves, a shorting cable approximately 3ft (0.91m) long with isolation clamps on each end, and a multi-meter to measure AC voltage. (Of these items, Dairyland offers a suitable 3ft long 1/0AWG shorting cable with isolation clamps, Model# BCL-1/0.) It is suggested that a grounding jumper be used as a safety precaution in the event the lead to the structure rises to an unsafe potential when it is disconnected during the following test procedure or if an electrical disturbance occurs while the CAD-270 is being installed. Be sure to remove the grounding jumper after the CAD-270 has been completely installed, as failure to do so will invalidate the data gathered during testing. If the structure voltage is not at a safe touch potential (i.e., >15VAC to ground per NACE SP0177), then insulating gloves should be used.

⚠ WARNING

Due to induced AC, AC fault or lightning on the structure, the voltage on the structure may rise to an unsafe level. Sparking and current flow may occur when connecting or disconnecting the CAD-270. All necessary safety precautions must be taken by the user to avoid unsafe worker conditions, including arcing, in accordance with applicable industry and/or company-required practices. Dairyland provides suggested procedures for applying this equipment (See section on Worker Safety). The user is ultimately responsible for and approve the procedures to be used by its workers when connecting or disconnecting this equipment as Dairyland cannot be familiar with each user's safety guidelines.

⚠ WARNING

THIS DEVICE IS FOR TEMPORARY USE ONLY.

THIS DEVICE DOES NOT PROVIDE OVER-VOLTAGE PROTECTION.

The CAD-270 is intended for temporary test purposes only and must be removed from service upon completion of testing. In the event of an over-voltage condition, the CAD-270 will NOT provide protection for personnel or equipment.

⚠ WARNING

This device is not certified for use in hazardous locations. Only short term use for testing purposes only is recommended.

NOTICE

The CAD-270 has no polarity. Either terminal can be connected to the positive or negative connections.

MOUNTING

As the CAD-270 is a temporary device only, physically rigid securement of the device is not typically necessary. A solid electrical connection is all that is required for the duration of the testing to be performed. Appropriate mounting considerations should be made by the user for anticipated weather conditions for the duration of the testing. Connect to the CAD-270 with the 5/16” hardware provided.

TESTING INSTRUCTIONS:

Equipment needed to perform this testing:

- Finished pipeline installation.
- For an AC mitigation application, the installed grounding systems, with the insulated conductor attachment both from the pipeline and grounding system to an accessible above-grade point or enclosure.
- A functioning CP system, presumably with impressed current rectifiers.
- GPS-synchronized interrupters installed on all current sources (including influencing foreign impressed current systems).
- Pipeline field data collection survey equipment, including display/recording.

Considerations prior to testing:

- The CAD-270 device should be installed at all planned decoupler sites for the pipeline segment of interest. Potential measurements and/or waveforms taken at one location are often affected by other decouplers in the system, even decouplers several miles away.
- The pipeline segment of interest should be electrically isolated to the extent possible. If the off potential without the CAD-270 installed does not quickly stabilize (i.e., the waveform flatlines) at an expected value, there is likely a foreign influence at play.
- Determine how each CAD-270 test location (future decoupler location) will be identified as you capture data. This will be essential to compare data side by side (or overlaid) for each test location.
- Set a reasonably long on/off rectifier cycle time. This will allow the captured waveform to show the full capacitive dissipation time. Given that the following procedure only requires waveforms to be taken at decoupler installation sites, a long on/off cycle should not be a burden for the testing to be performed. As a general guideline, an off cycle of 4 seconds will typically allow for full capacitive dissipation in most worst-case conditions. Setting a long on/off cycle will be particularly beneficial if viewing waveforms in the field is impractical.

For the purposes of these instructions, it is assumed that no prior decouplers have been installed on the asset or pipeline in question. If standard decouplers have been installed, the CAD-270 is unnecessary. However, this testing procedure can still be used, with the waverforms FIRST being taken with the standard decouplers in place, followed by waveforms with ALL decouplers disconnected.

1. Capture your first instant off waveform with all CAD-270s DISCONNECTED. Any bonds between the pipeline and the grounding system should be open for this test.
2. Should this waveform not meet expectations of either polarized potential values or a flatlined (stabilized) polarized potential very quickly, there is likely an external influence that should be mitigated before continuing. Being able to view the waveform of the collected data in the field will be beneficial for this purpose.
3. Once satisfied that external influences have been mitigated, continue to capture waveforms at each test location along the pipeline segment of interest.
4. Taking appropriate safety precautions, connect ALL CAD-270s.
5. Capture your first instant off waveform with all CAD-270s CONNECTED.

6. If field evaluation of the waveform is possible, compare this waveform to the waveform taken at this test location with CAD-270s disconnected. If the instant off potential reached during the off cycle has not yet reached the instant off potential achieved during the previous test at this location, a longer off cycle is recommended.

7. Once satisfied that the off cycle is of sufficient duration, continue to capture waveforms at each test location along the pipeline segment of interest.

8. Once all waveforms have been captured, the CAD-270 devices must be removed from service and data analysis can be performed as described next.

9. Compare waveforms. Evaluating each pair of waveforms for a given test location will give a great indication of which type of decoupler to employ for the pipeline segment of interest.

   a. A pair of waveforms as shown in Figure 1 below would indicate that a standard decoupler (SSD or PCR) is likely to produce future instant off potential measurements with good accuracy and a relatively short on/off cycle. This is important when anticipating a Close Interval Survey (CIS) and the time needed to conduct that testing.

   b. A pair of waveforms as shown in Figure 2 below indicate that site conditions are not favorable for the use of a standard decoupler, and that a PCRX decoupler should be used to minimize the capacitive dissipation time.

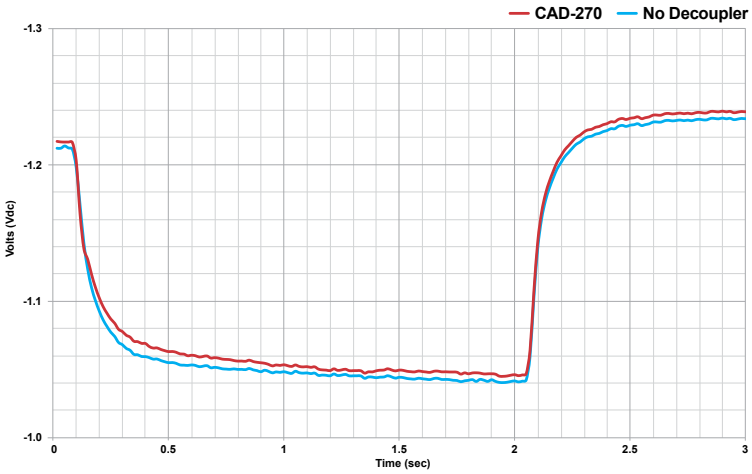

Figure 1

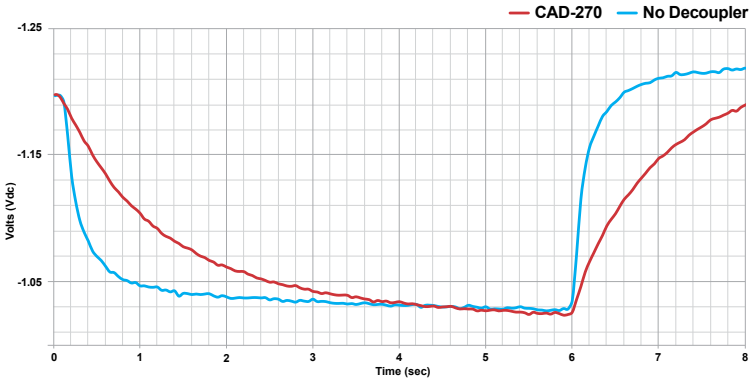

Figure 2

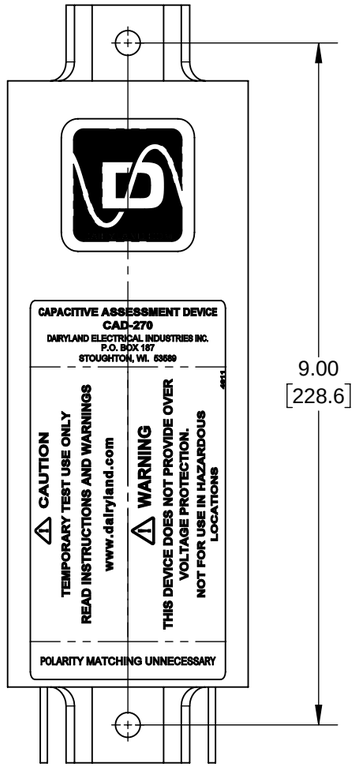

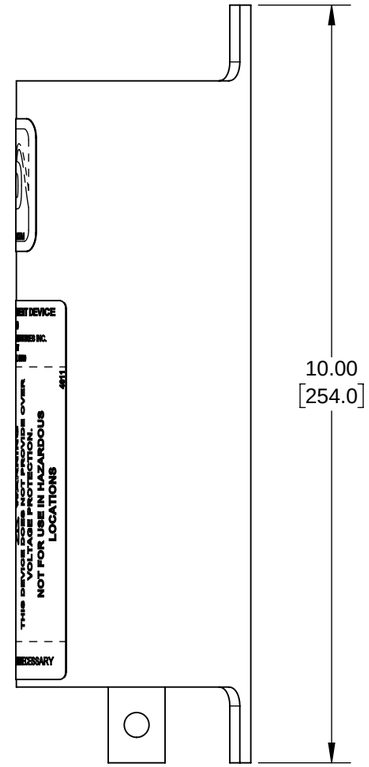

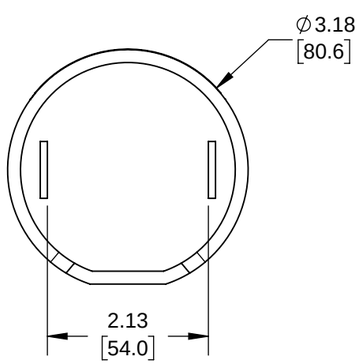

ISOMETRIC VIEW

ASME Y14.5M 2018 APPLIES	MATERIAL: NA	DRAWN: MAD	DATE DRAWN: 10/26/2020	DAIRYLAND ELECTRICAL INDUSTRIES, INC. P.O. BOX 187 STOUGHTON, WI 53589 608-877-9900 DAIRYLAND.COM
UNLESS OTHERWISE SPECIFIED DIMENSIONS ARE IN INCHES. COMPUTER-GENERATED DRAWING DO NOT EDIT MANUALLY.	FINISH: NA	DWG APPROVAL: RJH	DATE APPROVAL: 10/27/2020	TITLE: CAPACITIVE ASSESSMENT DEVICE - CAD-270
.XXX = ±.005" .XX = ±.01" .X = ±.03" ANGLES = ±1° 63	THE INFORMATION CONTAINED IN THIS DRAWING IS THE SOLE PROPERTY OF DIARYLAND ELECTRICAL INDUSTRIES, INC. ANY REPRODUCTION IN PART OR WHOLE, WITHOUT THE WRITTEN PERMISSION OF DIARYLAND ELECTRICAL INDUSTRIES, INC. IS PROHIBITED.	SHEET: 1 OF 1	DWG SIZE: B	SCALE: 1:2 REV: PART #: 100130