LITERATURE

SOLID-STATE DECOUPLER (SSD)

DAIRYLAND
ELECTRICAL INDUSTRIES
ALWAYS RUGGED. ALWAYS RELIABLE.

INTRODUCTION

The Solid-State Decoupler (SSD) series continues the Dairyland tradition of offering innovative protection products to the corrosion prevention industry, while building off of proven solid-state technology developed by Dairyland. With a lightweight, non-metallic housing and lower cost, the SSD can be economically applied throughout a cathodically protected system.

The SSD functions as a DC isolation and AC coupling device (a “decoupler”), preventing the flow of CP current up to a predetermined voltage threshold, while passing any induced AC current. For voltage that attempts to exceed the threshold, the device instantly switches to the shorted mode, providing over-voltage protection. When the event has passed, the device automatically switches back to the DC blocking mode. This operation can occur an unlimited number of times, and is typically due to AC faults and lightning, which the SSD is rated for. While the standard threshold is -2V/+2V, the SSD can be supplied with up to a -3V/+1V threshold and several lower threshold combinations. The threshold is the absolute, or peak, voltage at which switching occurs, and is the sum of the DC and peak AC voltage across the terminals of the device. This results in a very low, and safe, clamping voltage across the SSD terminals.

COMMON APPLICATIONS

Gradient Control Mat Decoupling

The popularity and success of the lower cost SSD makes decoupling gradient control mats an affordable and attractive option. With a decoupled gradient control mat: (a) the potential of the mat material is irrelevant, (b) the mat can be made from less costly materials than pure zinc, (c) interaction between the mat and CP system is eliminated, and (d) decoupling allows CP readings can be taken on the pipeline in the vicinity of the mat.

Isolation Joint Protection

Isolation joints often need over-voltage protection against lightning and AC fault current, and in some cases, steady-state induced AC voltage. Due to the small clearance between opposite sides of the isolation flange, a protective device must provide a low clamping voltage, including the voltage effects of the conductors or bus bars used to connect the product (See the Dairyland technical articles on conductor length relating to lightning effects.)

DID YOU KNOW?

The SSD has been certified by independent laboratories Underwriters Laboratories and DEMKO for compliance to worldwide standards and codes, and is certified for use in Div 2 and Zone 2 hazardous locations. For more information on certifications and listings, visit www.dairyland.com.

AC Voltage Mitigation

As an AC mitigation device, the SSD can collapse the steady-state voltage between the connection points to a negligible level by providing continuous AC grounding for pipelines with induced AC while leaving cathodic protection unaffected.

Decoupling Electric Equipment Grounding Systems

When electrical equipment is mounted on a cathodically protected structure, the SSD can provide DC isolation with fault rated AC continuity. As grounding codes apply, the SSD is listed by UL for meeting the requirements of an effective AC grounding path per U.S. and Canadian electric codes.

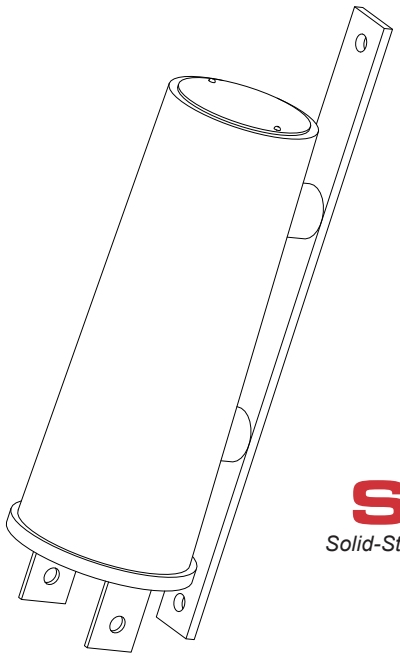

SSD
Solid-State Decoupler

PRODUCT OVERVIEW

Blocking Voltage

At a voltage below the blocking voltage selected, the SSD blocks the flow of DC current and allows AC current to pass. At a voltage above the blocking voltage selected, the SSD is a bidirectional conducting device that readily allows all current to flow, thereby limiting the voltage on the structure.

The standard blocking voltage of -2/+2 is usually adequate for most applications, since the voltage difference between the two connected points is usually much less than 2V. For example, an isolation joint on a cathodically protected pipeline either has cathodic protection on both sides of the joint, leaving the voltage difference near zero, or one side has CP and the other is unprotected, with a typical difference of about 1V.

For cases where a higher blocking voltage is needed, the model with a -3/+1 threshold is usually adequate. In the model number structure the polarity signs are not shown, but the polarity described above is implied. Polarity marks (+ and -) are provided on the SSD.

Additional blocking threshold options are available. Contact Dairyland.

DC Leakage Current versus Blocking Voltage

The DC leakage current at the maximum blocking voltage for any SSD model is normally less than 10 milliamperes at 20°C and less than 100 milliamperes at 65°C. With normal cathodic protection voltage across the SSD, the leakage current is typically well under 1 milliampere under either temperature condition, a value that is insignificant to a cathodic protection system.

Steady-State AC Current Rating

This value represents the maximum allowable steady-state AC through the SSD while the device is blocking DC current. The source of this current would be induced from overhead power lines. Measure or otherwise determine the available steady-state current in this intended connection and compare to the SSD rating of 45A AC-rms at 50/60 Hz, leaving margin for varying system conditions. For more information on steady-state current view our web article: Measuring Induced AC.

AC Fault Current Rating

There are applications where an over-voltage protective device may be subject to fault current, even though no induced AC voltage is present. For this reason the SSD was designed to have AC fault current carrying capability. The SSD will limit the voltage between its connection points to less than 10 volts AC under the maximum fault current ratings listed in the following table. The ratings are amperes rms symmetrical.

Select an SSD fault current rating that encompasses the fault current available. For more information on sizing for available fault current, view our web article: Determining AC Fault Current.

AC Fault Current Ratings
(Amps AC-RMS Symmetrical 50/60Hz)

Cycles	1.2kA	2kA	3.7kA	5kA
1	2100	5300	6500	8800
3	1600	4500	5000	6800
10	1400	3700	4200	5700
30	1200	2000	3700	5000

Lightning Impulse Current Rating

The lightning impulse current rating should not be confused with the AC fault current rating. Lightning has a very different waveform, with a faster rise time, a shorter duration, and much less energy than an AC current waveform of the same peak current. Lightning current ratings are established by subjecting the over-voltage protective device to representative lightning current in a high power test laboratory. The waveforms most commonly used are the 8 x 20 microsecond waveform and the 4 x 10 microsecond waveform. The first number represents the time it takes the lightning impulse to reach its crest value and the second number represents the time it takes for the current to decrease to 1/2 its crest value. See the chart below for model.

Lightning Impulse Current Rating

Model	Rating	Waveform
1.2kA	100kA Crest	8 x 20
2kA	100kA Crest	8 x 20
3.7kA	100kA Crest	8 x 20
5kA	100kA Crest	8 x 20
5kA	50kA Crest	10 x 350

An optional Class N rating (ISG class N withstand lightning current per IEC 62561-3:2017) of 50kA crest, 10 x 350 microseconds is available if required by international standards. This option also meets or exceeds Dairyland's standard 100kA, 8 x 20 microsecond rating.

WARNING

Keep the Conductors Short!

The SSD is designed to keep the voltage between the device terminals to a limited value. During lightning conditions, a more important factor than the SSD voltage clamping capability is the voltage developed in the conductors or bus used to attach the device. Use low inductance bus bars or conductors ideally less than 6 inches (150 mm) long for best results. More information on conductor length is available at www.dairyland.com.

Terminal Arrangement

The SSD comes standard with terminals arranged perpendicular to the mounting bracket and is designated by a "-R" at the end of the model number. As an option, the SSD is also available with terminals parallel to the mounting bracket for installation with pin brazed studs and the hex coupling nut. This option is chosen by leaving the "-R" off the catalog number. Refer to the SSD outline drawings for more information.

Ordering Instructions

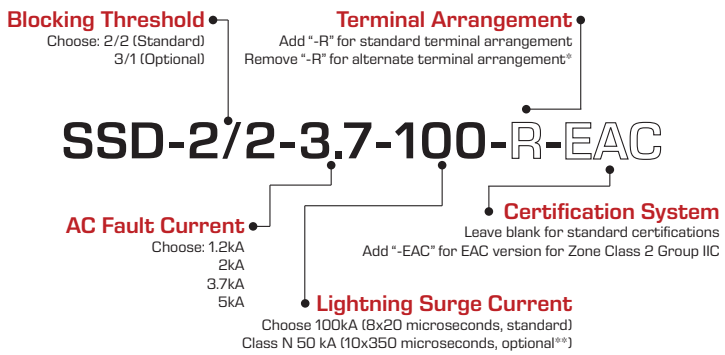

Notes:
* Alternate terminal arrangement reommended for installation using pin-brazed studs.
** Optional unless required by international standards

FEATURES AND CERTIFICATIONS

Certifications

The SSD has been tested by Nationally Recognized Testing Laboratories (NRTLs) for compliance to independent standards in its operation, ratings, and construction. This includes compliance to standards for:

Class I, Div. 2, Groups A, B, C, D and Zone 2, Group IIC

Class & Division System:
UL (United States) and C-UL (Canada)

- Effective Ground Fault Current Path per:
  - NFPA 70 (US National Electric Code – NEC): Article 250.4(A)(5)
  - CSA C22.1 (Canadian Electric Code, Part I): 10-100 & 10-500
- Isolation of Objectionable DC Ground Currents per:
  - NFPA 70: Article 250.6(E)
  - CSA C22.1: 10-100 & 10-500
- Hazardous Location Use:
  Class 1, Division 2, Groups A, B,C,D by UL & C-UL per:
  - UL 121201, 9th Ed. and CSA C22.2 No.213-17
- Safety Requirements for Electrical Equipment per:
  - UL 61010-1, 3rd Ed. & CSA C22.2 No. 61010-1
  - Overvoltage Protection from Impulse (Lightning) Current: 100kA (8 x 20μs)
  - Enclosure Rating: IP68 (Submersible to 2 meters depth)
  - Temperature Range: -45°C to +65°C (-49°F to +149°F)

Zone System: ATEX / IECEx / UKEx (Europe / International / UK). ATEX per directive 2014/34/EU (Equipment for use in Potentially Explosive Atmospheres):

- Zone 2, Group IIC, Increased Safety "ec"
- EN IEC 60079-0: 2018
- EN IEC 60079-7: 2015+A1:2018
- IEC 60079-0: 2017
- IEC 60079-7: 2017
- Overvoltage Protection from Impulse (Lightning) Current: 100kA (8 x 20μs)
- Temperature Range: -45°C to +65°C
- Enclosure Rating: IP68

Solid-State Design

The SSD uses proven solid-state components which have an instantaneous response with respect to voltage, thereby initiating voltage clamping immediately when the voltage attempts to exceed the blocking level selected.

Fail-Safe

An important safety feature of the SSD is that if subject to AC fault current or lightning impulse current such that failure occurs, failure will occur in the shorted mode. In the shorted mode, the SSD will carry rated fault current or lightning impulse current and still provide an effective grounding (or conducting) path.

Field Testing/Maintenance

The SSD can be field tested with an AC/DC multimeter and clamp-on AC ammeter. Testing procedures are included in the installation instructions. The SSD is completely maintenance-free.

Enclosure

The SSD is packaged in a molded, non-metallic enclosure which is rated IP68 (to 2m depth) and is suitable for indoor or outdoor use, in submersible and non-submersible applications. See the SSD outline drawings for dimensions. The SSD must not be installed such that it may be submerged in freezing conditions.

Polarity/Electrical Connection

The terminals of the SSD are marked for polarity. The negative terminal should connect to the more negative structure, or the structure with the cathodic protection applied, while the positive terminal should connect to the grounded or more positive structure.

Number of Operations

The number of times that the SSD can be subject to its rated lightning or AC fault current rating is virtually unlimited, provided the operations are not immediately repetitive.

Energy Requirements

None. The device is totally passive.

MOUNTING OPTIONS

Mounting of SSD

The SSD will be supplied with the bracket shown in the outline drawings for general use mounting. This bracket will not be provided if the SSD is ordered with one of the flange mounting kits as it will not be needed.

Mounting Accessories

Numerous mounting accessories are available from Dairyland to aid in the proper installation of the SSD. Detailed accessory information, including complete installation instructions are available on the Dairyland website here: Dairyland Accessories.

Specific Installation Guidance

The Dairyland website contains detailed information on the installation methods specific to a given application. For wiring diagrams and/or application guidance, see Dairyland Applications.

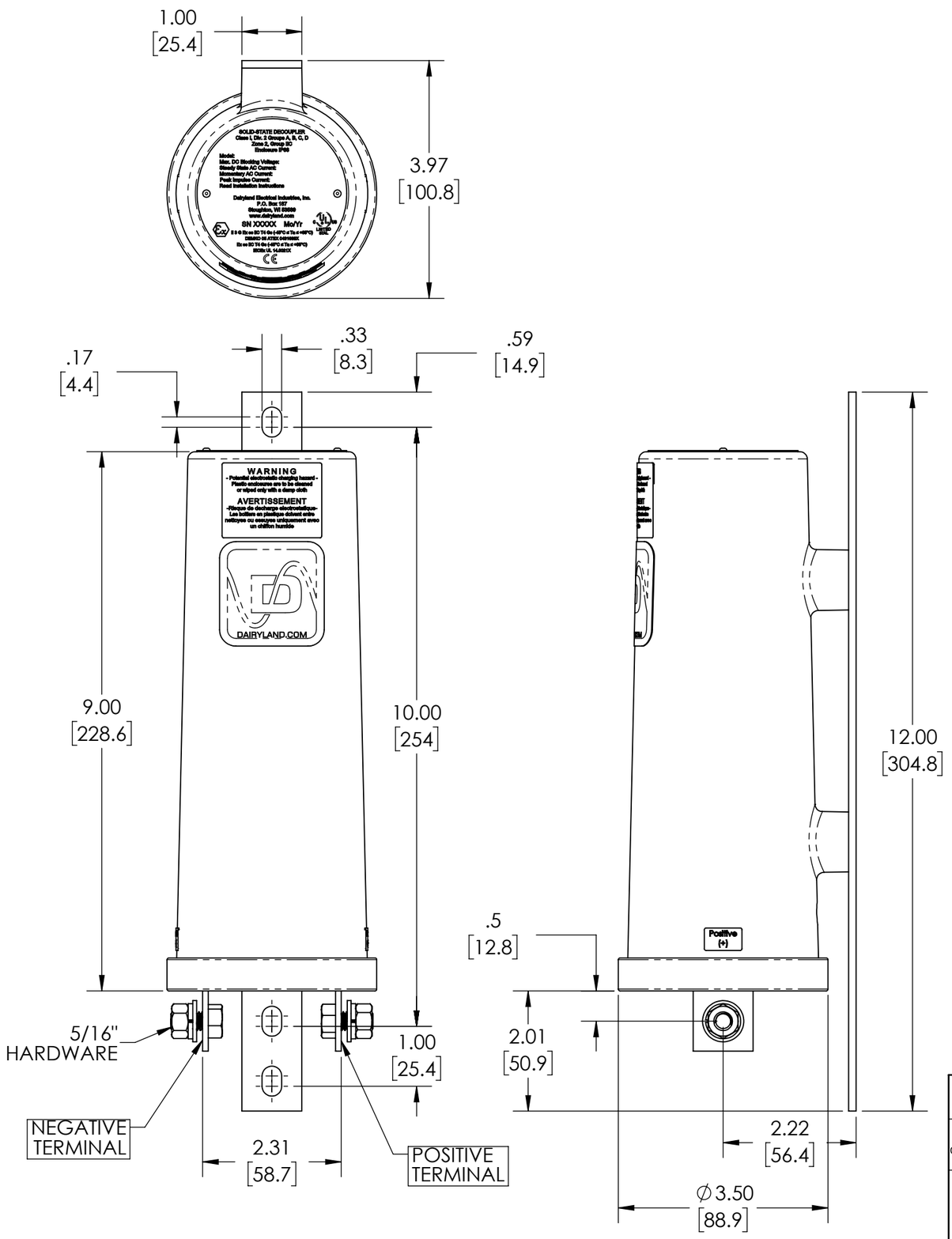

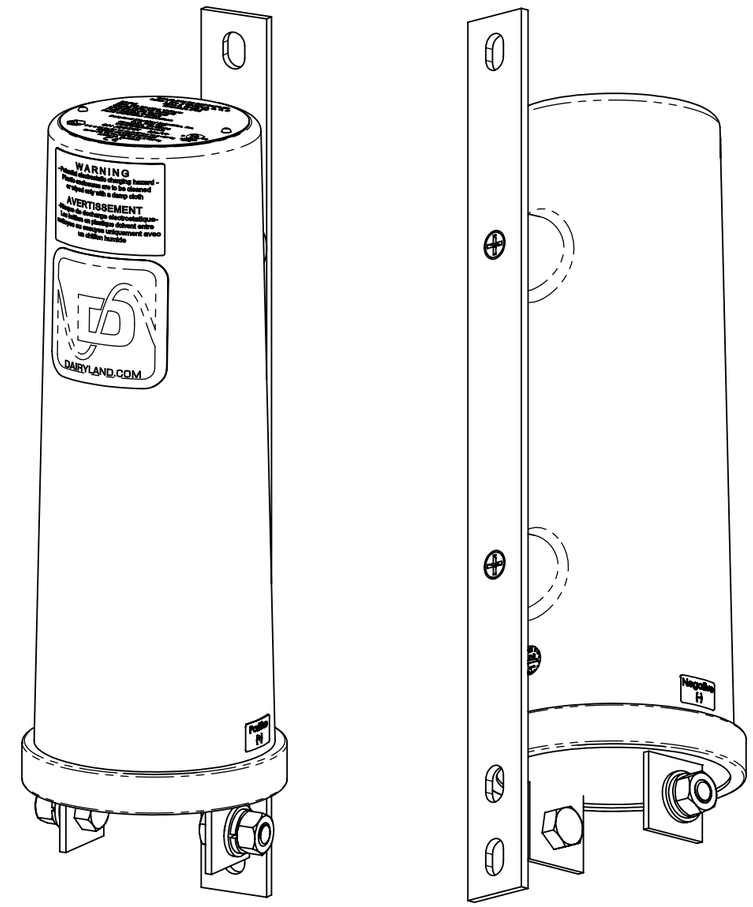

NOTE: THIS SHEET APPLIES TO ALL SSD MODELS WITH STANDARD TERMINAL ARRANGEMENT (-R MODEL NUMBERS).

ASME Y14.5M 2018 APPLIES UNLESS OTHERWISE SPECIFIED DIMENSIONS ARE IN INCHES. COMPUTER-GENERATED DRAWING DO NOT EDIT MANUALLY. **.XXX = ±.005"** **.XX = ±.01"** **.X = ±.03"** **ANGLES = ±1°** 63	MATERIAL: **NA** FINISH: **NA**	DRAWN: **JSJ** DWG APPROVAL: **RJH**	DATE DRAWN: **01/21/2021** DATE APPROVAL: **07/02/2021**	**DAIRYLAND ELECTRICAL INDUSTRIES, INC.** P.O. BOX 187 STOUGHTON, WI 53589 608-877-9900 DAIRYLAND.COM
		TITLE:	**SSD OUTLINE DRAWING**	
	THE INFORMATION CONTAINED IN THIS DRAWING IS THE SOLE PROPERTY OF DIARYLAND ELECTRICAL INDUSTRIES, INC. ANY REPRODUCTION IN PART OR WHOLE, WITHOUT THE WRITTEN PERMISSION OF DIARYLAND ELECTRICAL INDUSTRIES, INC. IS PROHIBITED.	SHEET: 1 OF 2	DWG SIZE: B	SCALE: 1:2	REV: A	PART #: 100135

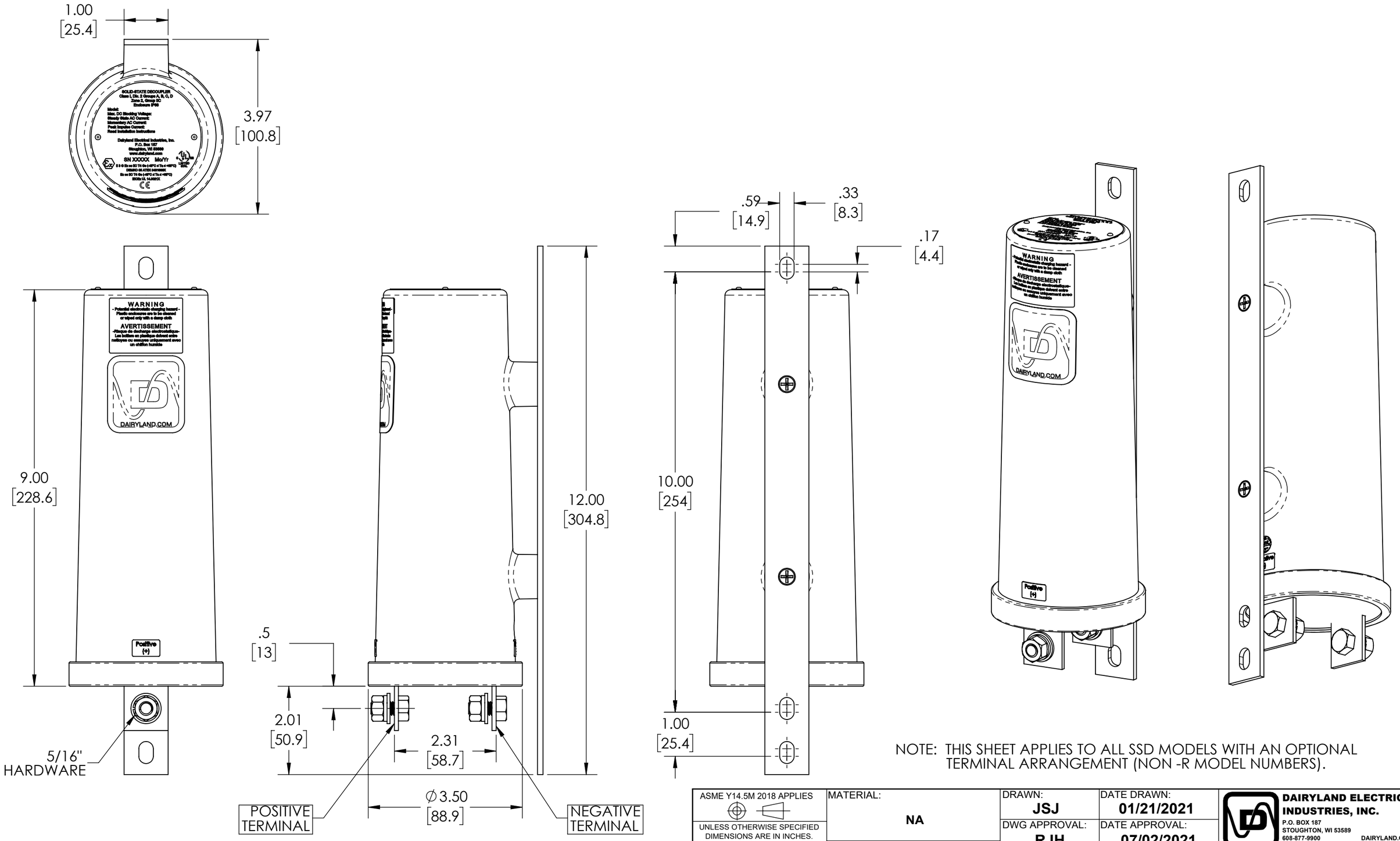

NOTE: THIS SHEET APPLIES TO ALL SSD MODELS WITH AN OPTIONAL TERMINAL ARRANGEMENT (NON -R MODEL NUMBERS).

ASME Y14.5M 2018 APPLIES UNLESS OTHERWISE SPECIFIED DIMENSIONS ARE IN INCHES. COMPUTER-GENERATED DRAWING DO NOT EDIT MANUALLY. **.XXX = ±.005"** **.XX = ±.01"** **.X = ±.03"** **ANGLES = ±1°** 63	MATERIAL: **NA** FINISH: **NA**	DRAWN: **JSJ** DWG APPROVAL: **RJH**	DATE DRAWN: **01/21/2021** DATE APPROVAL: **07/02/2021**	**DAIRYLAND ELECTRICAL INDUSTRIES, INC.** P.O. BOX 187 STOUGHTON, WI 53589 608-877-9900 DAIRYLAND.COM
		TITLE: **SSD OUTLINE DRAWING**		
	THE INFORMATION CONTAINED IN THIS DRAWING IS THE SOLE PROPERTY OF DIARYLAND ELECTRICAL INDUSTRIES, INC. ANY REPRODUCTION IN PART OR WHOLE, WITHOUT THE WRITTEN PERMISSION OF DIARYLAND ELECTRICAL INDUSTRIES, INC. IS PROHIBITED.	SHEET: 2 OF 2	DWG SIZE: B	SCALE: 1:2	REV: A	PART #: 100135